AY000171

Accessories ● Installation - pipe installation system

Accessories Sensor, mounting bracket, 56x36x42mm, V2A

This mounting system is suitable for mounting sensors anywhere. For the mounting tubes with a diameter of 12mm, which are available in lengths of 200 and 500mm, there are a variety of clamp holders with which the tubes can be securely fastened. The mounting clamp holder is equipped with an M6 inside thread. Both the mounting brackets and the universal mounting brackets with ball head can be attached to it. For the foot clamp holder AY000161 and the clamp holder AY000163, the magnetic AY000162 is also available, with which the mounting structure can be easily attached to a magnetic machine part.

Electrical features

Internal hole diameter	30 mm

Mechanical features

Width	42 mm
Height	56 mm
Length	35.5 mm
Material	Stainless steel 1.4301

Other features

Version	Mounting bracket

Classification

ETIM 8	EC002024 Accessories/spare parts for command devices

More

IPF Product Group	900 accessories
packaging dimensions	100 x 70 x 50 mm
gross weight	38 g
Customs tariff number	73269098
WEEE number	40951076
POP-compliant	Yes
Reach-compliant	Yes
RoHS-compliant	Yes

Dimensional drawing

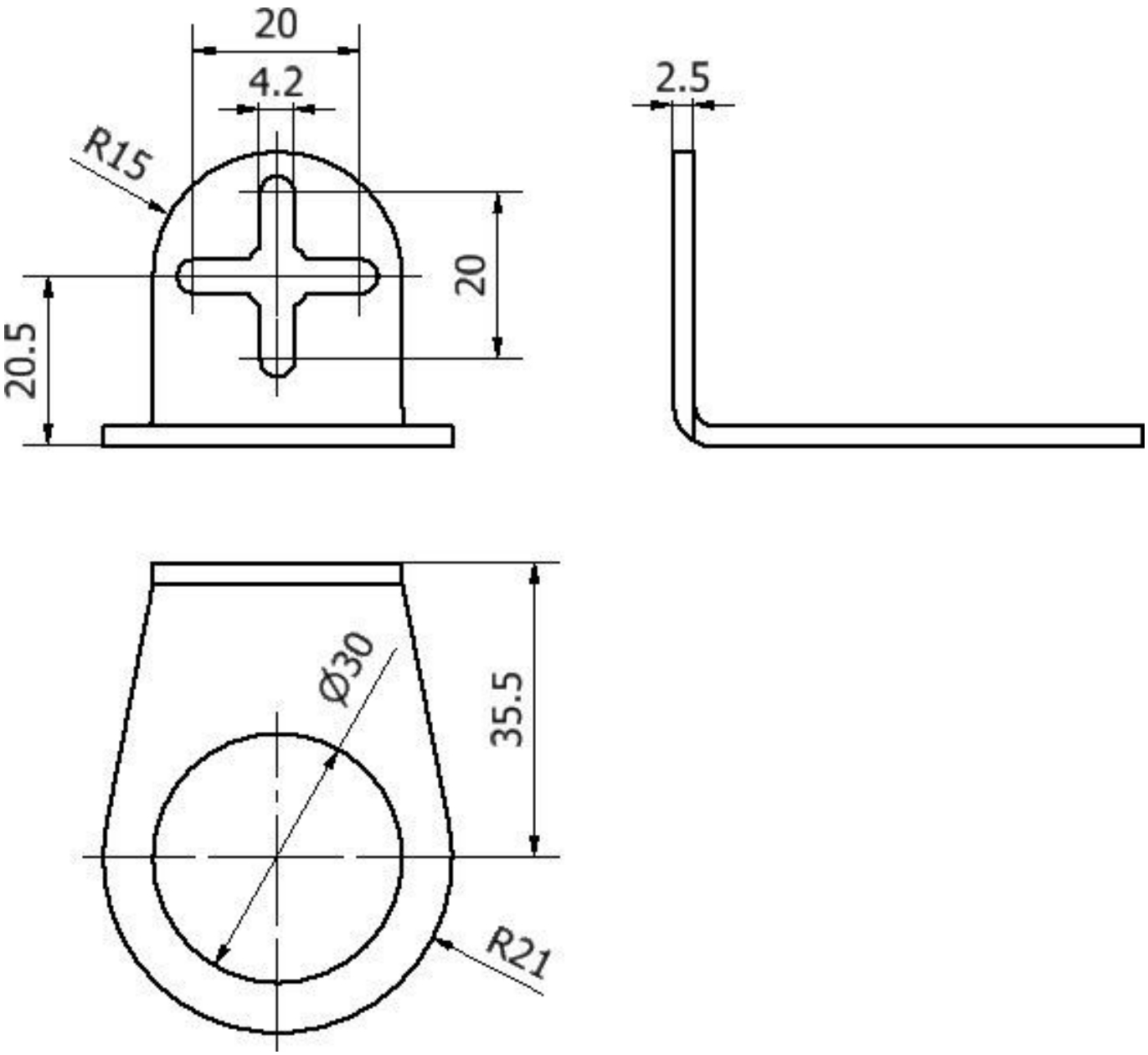

Installation

Mounting / installation may only be carried out by a qualified electrician!

Disposal

WEEE number according to § 6 para. 3 ElektroG: 40951076

Safety warnings

/ Before initial operation, please make sure to follow all safety instructions that may be provided in the product information.

/ Never use these devices in applications where the safety of a person depends on their functionality.