OHSI0330

Optical sensors ● Frame light barriers

Sensor Optical, frame 200x198, 214x15x230mm, dynamic, resolution 0,7mm, 12-32V DC, PNP/NPN NC/NO, M16 connector 5pin, IP67, aluminum, With time function

Optoelectronics frame light barriers and ring sensors work according to the principle of the through-beam light barrier. The housing contains a large number of emitter and receiver elements that form a light curtain and thus detect and record a wide variety of objects. Application examples for these systems are ejection controls at presses, presence controls and length measurements of wires or pipes.

Electrical features

Display	LED display
Type of plug-in contact	Male (connector)
Type of switching function	Normally closed contact/normally open contact
Type of electrical connection	M16 plug connector
Type of switching output	PNP/NPN
Rated switching current	200 mA
Setting procedure	Potentiometer
Pulse stretching	20 - 300 ms
Short-circuit protection	Yes
No-load current	200 mA
Number of pins	5
Switching frequency	1000 Hz
Switching behavior of the output	Dynamic
Protection class	III
Reverse polarity protection	Yes
Operating voltage (DC)	12 - 32 V
Measuring range	0 - 200 mm
Time function	Yes
Output functions	Switching point

Mechanical features

Design	Cuboid
Width	230 mm
Active zone width	200 mm
Height	214 mm
Active zone height	198 mm
Cable length	0.4 m
Length	15 mm
Frame opening, lengthwise	198 mm
Frame opening, crosswise	180 mm
Degree of protection (IP)	IP67
Housing material	Aluminum
With mechanical impact protection	Yes
Ambient temperature	-20 - 60 °C

Optical features

Resolution, dynamic	0.7 mm
Light source	Infrared light
Min. object size	0.7 mm

Classification

ETIM 8	EC002721 Frame light barrier

More

IPF Product Group	705 special devices (SI)
packaging dimensions	300 x 300 x 31 mm
gross weight	460 g
Customs tariff number	85365019
WEEE number	40951076
POP-compliant	Yes
Reach-compliant	Yes
RoHS-compliant	Yes

Connection

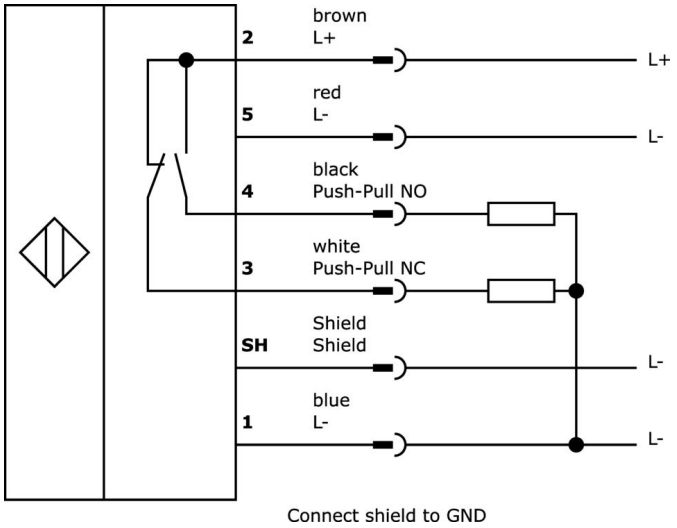

Dimensional drawing

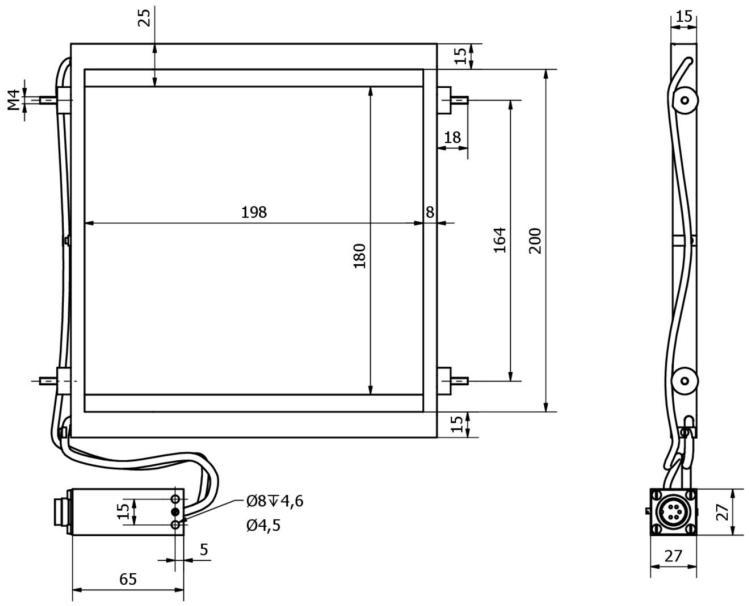

Extract accessories program

VK991240

Connection cable 2m, M16 socket 5-pin straight, free cable end, 5-core

You can find further accessories on our homepage

Installation

Mounting / installation may only be carried out by a qualified electrician!

Disposal

WEEE number according to § 6 para. 3 ElektroG: 40951076

Safety warnings

/ Before initial operation, please make sure to follow all safety instructions that may be provided in the product information.

/ Never use these devices in applications where the safety of a person depends on their functionality.