OV62C903

High performance light barriers ● Amplifier

High-performance photoelectric sensor amplifier, arc detection, 58x90x36mm, 24V, NO, 0-10V, terminal, IP20, plastic

The article OV62C903 is a single-channel amplifier for a light barrier from the subgroup "Amplifiers" within the super-group "High-power light barriers". As such, it processes the information it receives from its receiver and regulates the power of its transmitter accordingly. The high-power light barrier systems are designed for demanding applications where conventional light barriers reach their limits. They are characterized by extreme insensitivity to dirt, long ranges and high performance, which ensures reliable function even under difficult conditions.

The OV62C903 amplifier can achieve a range of up to isfault and thus offers reliable monitoring in various applications. Its simple installation, compact design and uncomplicated handling make it particularly user-friendly and versatile. With its robustness and reliability, the OV62C903 article is the ideal choice for industries such as the wood and paper industry, vehicle washing systems, the food industry and many other areas where a reliable photoelectric sensor solution is required.

Electrical features

Number of channels	1
Number of normally open contacts	1
Display	LED display
Type of switching function	Normally open contact (NO)
Type of analog output	0 - 10V
Type of electrical connection	Clamped terminal connection
Type of switching output	PNP
Rated switching current	100 mA
Input voltage tolerance	20 %
Setting procedure	Potentiometer
Short-circuit protection	Yes
No-load current	100 mA
Power consumption	2.4 VA
Switching capacity	6 VA
Switching voltage	24 V
Switching voltage AC	60 V
Switching voltage DC	60 V
Operating voltage (DC)	24 V

Mechanical features

Design	Cuboid
Width	35.5 mm
Height	58.5 mm
Length	90 mm
Mounting method	Top hat rail
Degree of protection (IP)	IP20
Housing material	Plastic
Ambient temperature	-25 - 50 °C

Classification

ETIM 8	EC001485 Isolation amplifier

More

IPF Product Group	101 high performance through-beam sensors and amplifiers
packaging dimensions	100 x 60 x 65 mm
gross weight	132 g
Customs tariff number	85365019
WEEE number	40951076
Reach-compliant	Yes
RoHS-compliant	Yes

Connection

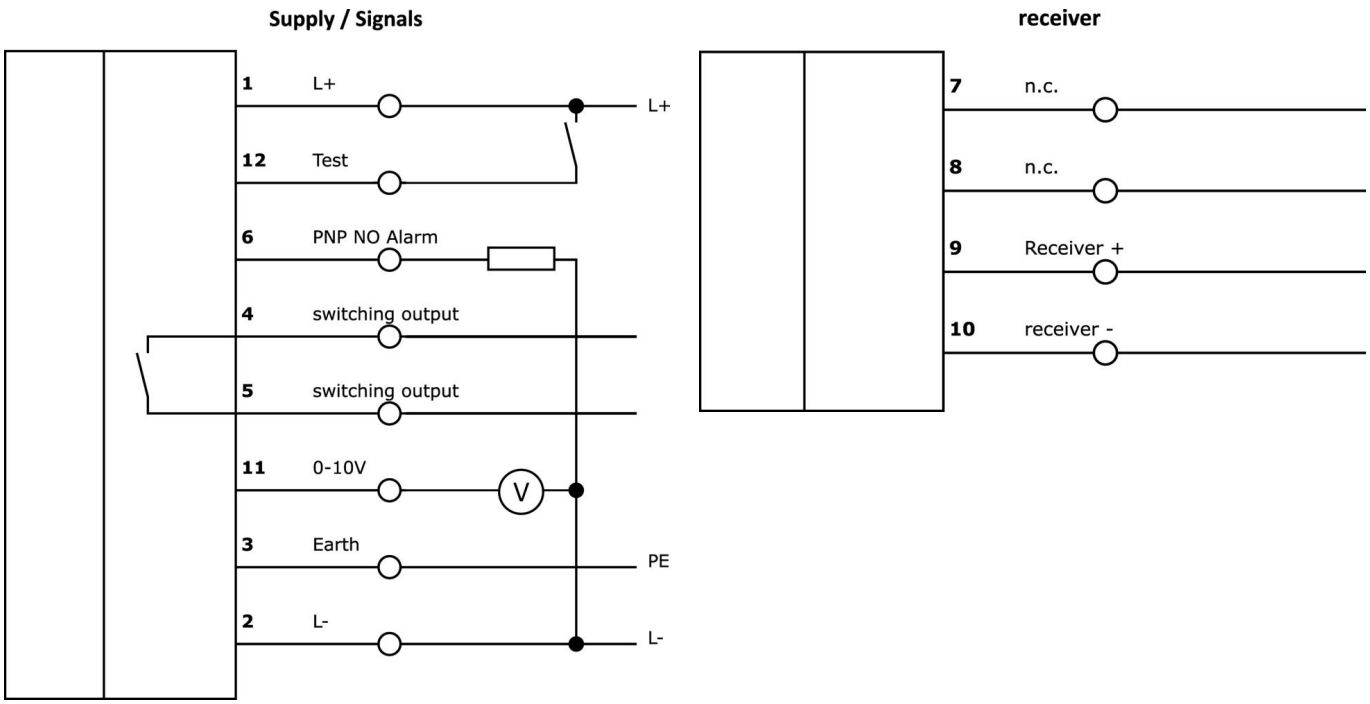

Extract accessories program

OE106001

High-power photoelectric sensor receiver, Ø10mm 45long, standard design, connection to amplifier, cable tail 2-pin 5m PVC, IP67, plastic+plastic

OE106003

High-performance photoelectric sensor receiver, Ø10mm 45long, standard design, connection to amplifier, 2-pin cable tail 15m PVC, IP67, plastic+plastic

AV000108

accessories miscellaneous, Surface mounted housing, 126x175x125mm, -40-120°C, IP66, Plastic PC, Gray, Transparent, With cable entry

AV000109

accessories miscellaneous, Surface mounted housing, 126x125x125mm, -40-120°C, IP66, Plastic PC, Gray, Transparent, With cable entry

OS106001

High-power photoelectric sensor transmitter, Ø10mm 45long, normal power (40mW), 12°, connection to amplifier, cable tail 5m PVC, IP67, plastic+plastic

OS106003

High-power photoelectric sensor transmitter, Ø10mm 45long, normal power (40mW), 12°, connection to amplifier, cable tail 15m PVC, IP67, plastic+plastic

You can find further accessories on our homepage

Installation

Mounting / installation may only be carried out by a qualified electrician!

Disposal

WEEE number according to § 6 para. 3 ElektroG: 40951076

Safety warnings

/ Before initial operation, please make sure to follow all safety instructions that may be provided in the product information.

/ Never use these devices in applications where the safety of a person depends on their functionality.