VL160122

Logic module ● Y-distributor

Logic module, 20x41x41mm, OR, 2fold, 10-30V DC, sensor side M8 Female (socket) 3pin, control side M12 Male (connector) 3pin, IP67, Plastic

Connecting digital signals directly at the machine can contribute to significant cost and effort minimization. A classic application is the linking of different signals directly in the field. Thus, it is possible to avoid long line paths of many individual devices, which significantly reduces the wiring effort and the need for control inputs. All input signals on the logic modules are visualized by integrated LED and are electrically decoupled from each other. In this way, influences from one device to the other are reliably prevented. The outputs of the modules are overload-proof and the upcoming signal is also indicated by an LED. In addition to logical input signal connections such as AND and OR, versions with signal change control are also available. The ipf logic modules are available for DIN rail mounting or as field modules. Therefor and because of the robust housing, which is characterized by a high degree of protection against the penetration of dust and water, our devices can be used in all areas of machines, equipment and tools.

Electrical features

Number of inputs per logic unit	2
Number of electrical connections, A connection	2
Number of electrical connections, B connection	1
Number of logic units	1
Display	LED display
Type of A electrical connection	M8
Type of B electrical connection	M12
Rated switching current	200 mA
No-load current	0.1 mA
Logic	OR
Number of pins of A connection	3
Number of pins of B connection	3
Switching frequency	5000 Hz
Operating voltage (DC)	10 - 30 V
Output logic	A1 = E1 V E2

Mechanical features

Width	27 mm
Height	15 mm
Length	48 mm
Degree of protection (IP)	IP67
Housing material	Plastic
Ambient temperature	-25 - 70 °C

Classification

ETIM 8	EC001417 Logic module

More

IPF Product Group	800 miscellaneous
packaging dimensions	120 x 100 x 20 mm
gross weight	19 g
Customs tariff number	85365005
WEEE number	40951076
Reach-compliant	Yes
RoHS-compliant	Yes

Connection

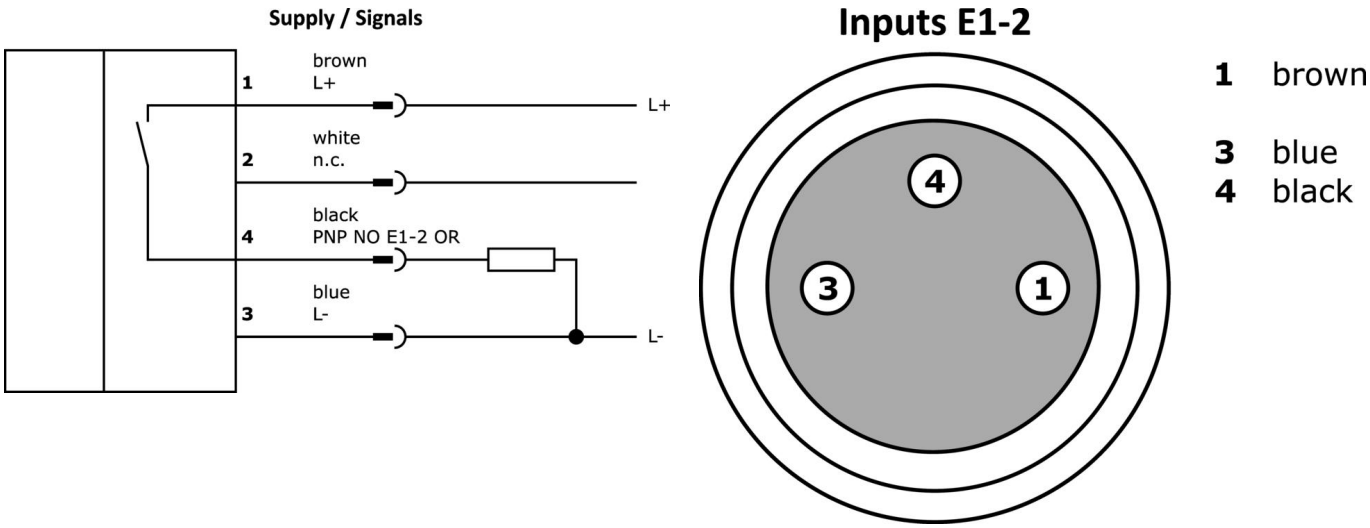

Dimensional drawing

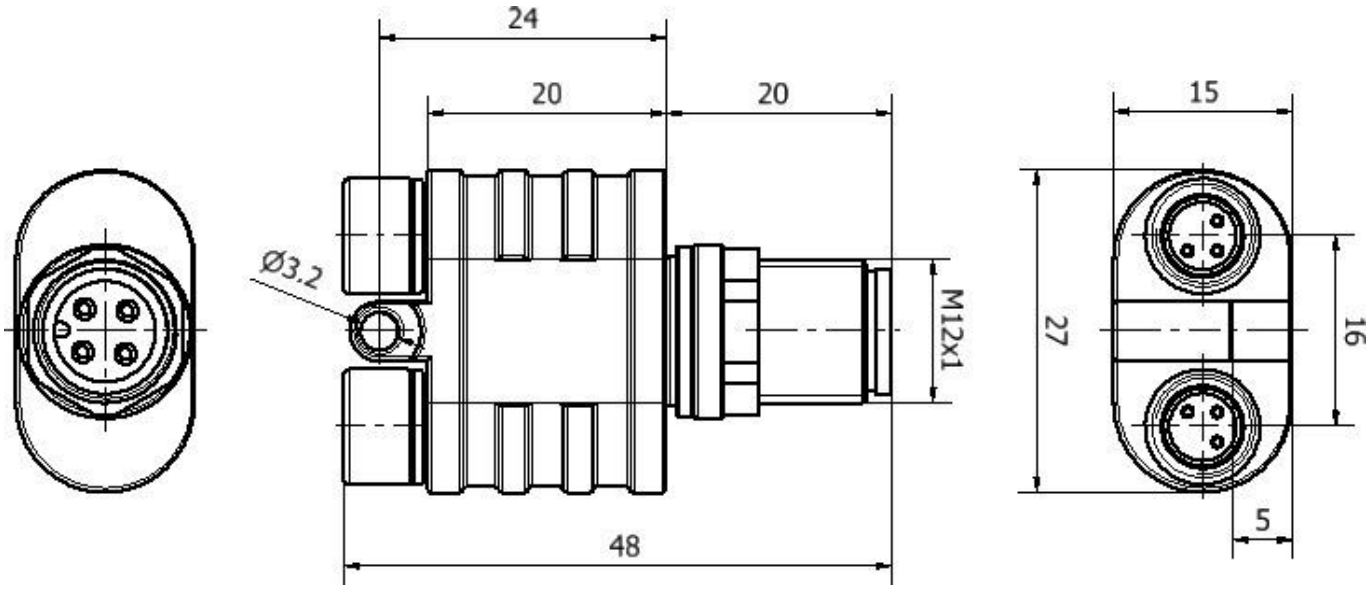

Extract accessories program

VK030F70

Connection cable, 0.3m, M8 socket 3-pin angular, M8 connector 3-pin straight, 3x0. 34mm², PUR (polyurethane), 60V, IP67, suitable for trailing chain and torsion resistant, oils and cooling lubricants, welding area, silicone-free

VK030F74

Connection cable, 0.3m, M8 socket 3-pin straight, M8 connector 3-pin straight, 3x0. 34mm², PUR (polyurethane), 60V, IP67, suitable for trailing chain and torsion resistant, oils and cooling lubricants, welding area, silicone-free

VK030F23

Connection cable, 0.3m, M12 socket 4-pin angular, M12 connector 4-pin straight, 4x0. 34mm², PUR (polyurethane), IP67, LED, suitable for trailing chain and torsion resistant, oils and cooling lubricants, welding area, silicone-free

VK030F26

Connection cable, 0.3m, M12 socket 4-pin straight, M12 connector 4-pin straight, 4x0. 34mm², PUR (polyurethane), IP67, LED, suitable for trailing chain and torsion resistant, oils and cooling lubricants, welding area, silicone-free

VK003020

Cable socket, angular, self-assembly, screw connection, Ø3-6. 5mm, 4A, 240V, -25-90°C, M12 socket 4-pin, IP67, PBT

VK003024

Cable socket, Straight, Suitable for self-assembly, Screw connection, Ø3-6.5mm, 4A, 240V, -25-90°C, M12 Female (socket) 4pin, IP67, PBT

VK030F60

Connection cable, 0.3m, M12 socket 3-pin angular, M8 connector 3-pin straight, 3x0. 34mm², PUR (polyurethane), 60V, IP67, suitable for trailing chain and torsion resistant, oils and cooling lubricants, welding area, silicone-free

VK030F64

Connection cable, 0.3m, M12 socket 3-pin straight, M8 connector 3-pin straight, 3x0. 34mm², PUR (polyurethane), 60V, IP67, suitable for trailing chain and torsion resistant, oils and cooling lubricants, welding area, silicone-free

VK030F72

Connection cable, 0.3m, M8 socket 3-pin angular, M8 connector 3-pin straight, 3x0. 34mm², PUR (polyurethane), IP67, LED, suitable for trailing chain and torsion resistant, oils and cooling lubricants, welding area, silicone-free

You can find further accessories on our homepage

Installation

Mounting / installation may only be carried out by a qualified electrician!

Disposal

WEEE number according to § 6 para. 3 ElektroG: 40951076

Safety warnings

/ Before initial operation, please make sure to follow all safety instructions that may be provided in the product information.

/ Never use these devices in applications where the safety of a person depends on their functionality.